** PROPRIETARY DATA **
THIS DOCUMENT CONTAINS DATA WHICH IS PROPRIETARY OR CONFIDENTIAL TO WV COMM (WV COMMUNICATIONS INCORPORATED). THIS DOCUMENT AND THE DATA CONTAINED HEREIN SHALL NOT BE USED, DUPLICATED, OR ALTERED WITHOUT THE EXPRESSED WRITTEN CONSENT OF WV COMM. ALL RIGHTS ARE RESERVED.

REVISIONS

ZONE	REV	DESCRIPTION	DATE	APPROVED
	A	RELEASED	1/24/2019	TT
	B	PER ECO #23-0001	01/24/23	UY/tt
	C	REMOVED SPARE CONN FROM PANEL	8/24/23	UY/fb

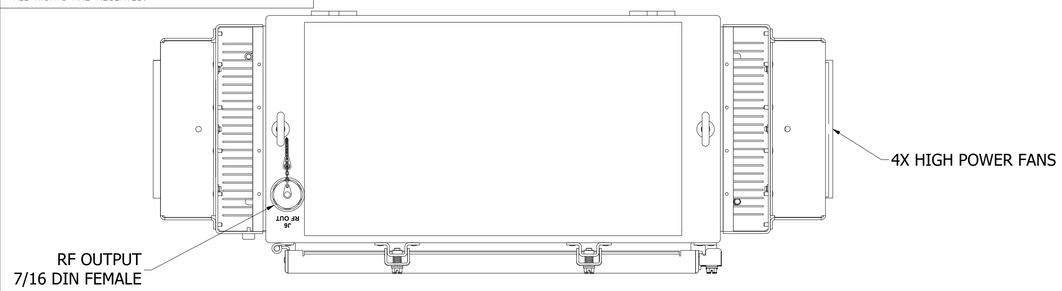

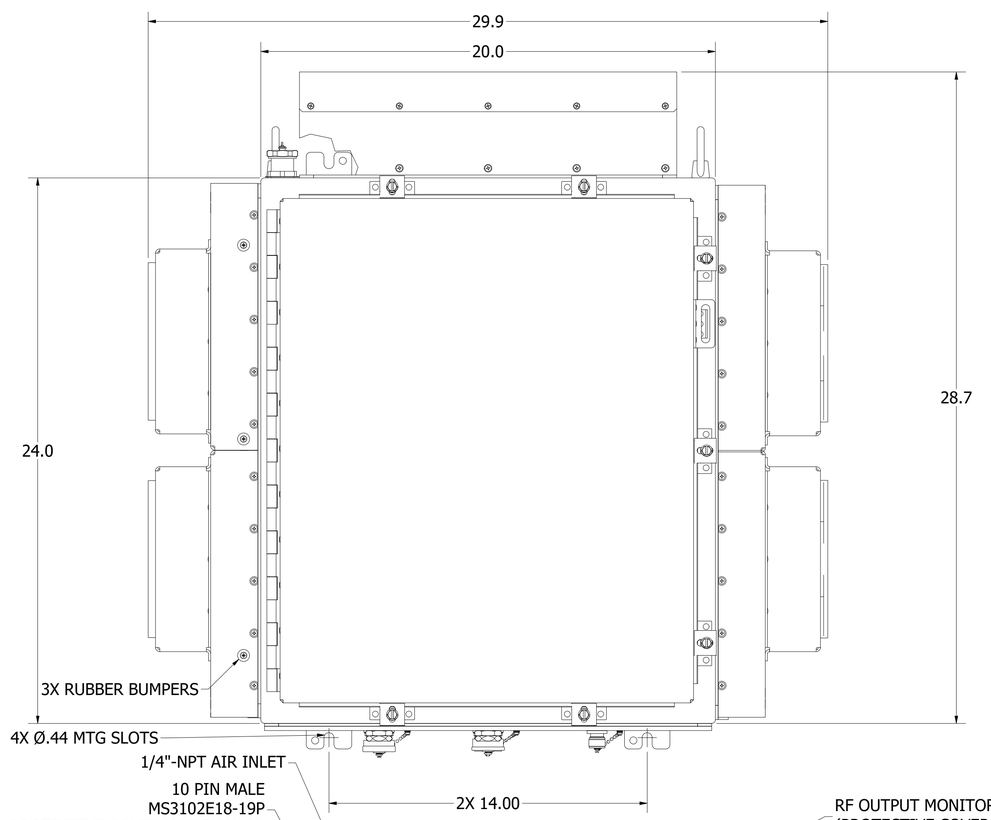

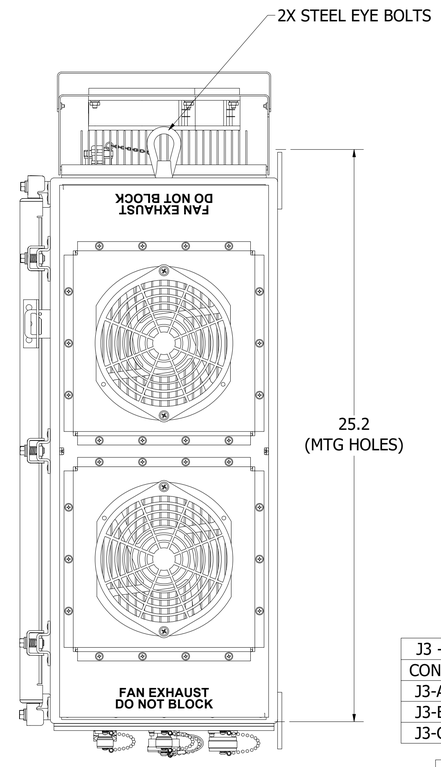

RF OPERATING FREQUENCY RANGE: 1750-2120MHz
RF OUTPUT POWER: 500W Redundant (+57dBm) Minimum at P_{LINEAR}
RF INPUT POWER: -6dBm Nominal
RF INPUT POWER W/O DAMAGE: +10dBm Maximum
SMALL SIGNAL GAIN: 63dB Minimum at P_{LINEAR}
GAIN STABILITY: ±1.0dB Maximum over operating temperature range
±0.5dB Maximum over 24 Hours at fixed input and within 10°C Range in the operating temp range
GAIN OVER FREQUENCY FLATNESS: ±1.5dB p-p Maximum over 1750-1850/2025-2120MHz bands,
1dB p-p Maximum over any 20MHz Range
0.2dB p-p Maximum over any 1MHz
in the 1750-1850/2025-2120MHz Bands into 1.25:1 Load VSWR
LOAD VSWR: Protected to operate into any Load Mismatch & Phase angle without Damage
RF ATTENUATION RANGE: 0 to 30dB in 0.1dB Steps
INPUT AND OUTPUT IMPEDANCE: 50Ω Nominal
INPUT/OUTPUT VSWR: 1.3:1 Maximum (Ref 50Ω)
NOISE FIGURE: 10dB Typical
RESIDUAL AM NOISE: -45dBc/0-10KHz, -78dBc at 500kHz, -80dBc over 0.5-1MHz
TWO TONE INTERMODULATION: -25dBc Maximum @ P_{LINEAR}*
HARMONIC SIGNAL LEVELS: -60dBc Maximum
SPURIOUS SIGNAL LEVELS: -60dBc Maximum over 2200-2300MHz
-90dBc over 7.6-8.5GHz
RF MONITOR OUTPUT PORT: -40dBc ±2dB Maximum
GROUP DELAY: Linear: 0.02ns/MHz Maximum
Parabolic: 0.003ns/MHz^2 Maximum
Ripple: 1.0ns p-p Maximum
AM/PM CONVERSION: 2.5°/dB Maximum @ P3dB
OPERATION MODES: Linear (VVA), Auto Level Control (ALC)
STANDARD FEATURES: Amplifier STANDBY/ONLINE, Mute
Power Units in dBm or Watts, Power Adjustment, Output
INDICATORS & ALARMS: Thermal Overload/Shutdown, FWD/REF
RF Output Power, Power Supply Voltage & Current, RF
Power Module(s) Status/ Fault, Muting
TEMPERATURE RANGES: Operating: -40 to +55°C (-40°C with 10 minutes warmup)
Non-Operating: -50 to +85°C
LOCAL CONTROL: Via Internal Color Touchscreen LCD
REMOTE CONTROL INTERFACE: Ethernet UDP/IP & RS-232 (both)
TX INHIBIT: Via J5 PINS A&B
18-24Vdc- Amplifier On
0-6Vdc - Amplifier Off
REDUNDANCY: 2ea 500W Amplifiers with Automatic Antenna/Hot Load Standby switchover when Primary Amplifier Fails
COOLING REQUIRED: Via Built-In Forced Air Cooling
AMPLIFIER PROTECTION: Over temperature, VSWR & Overdrive
AC INPUT POWER: 170-264VAC, 47-63 Hz, Single Phase,
2,200W Maximum (AC Power Includes 400W Heater)

CONNECTORS:
RF INPUT, OUTPUT & SAMPLE: RF input, Sample N-type Female, Output 7/16 DIN Female
CONTROL (I/O): 10-Pin MS-type RS-232/Control (mate provided)
RJ45 Ethernet, RFJTV21
AC INPUT POWER: 3-Pin MS-type (mate provided)
ENCLOSURE: Water proof with Positive Pressure air inlet, 1 PSI Safety relief valve
WEIGHT: 120Lbs Maximum
SIZE: 29.9"X28.7"X11.50"
PAINT: Per MIL-PRF-82585 White, Color # 17925 Per Fed-std-595

*The two tone test is to be performed with each of the two tones operating at -6 dB from P_{LINEAR}.
The -25dBc is the power of each of the 3rd order IM product relative to the power of each of the two tones.

J3 - AC POWER CONNECTOR	
CONN	DESCRIPTION
J3-A	230VAC LINE
J3-B	230 VAC NEUTRAL
J3-C	SAFETY GROUND

J4 - RJ45 FEMALE	
CONN	DESCRIPTION
J4-1	TX+
J4-2	TX-
J4-3	RX+
J4-4	N/C
J4-5	N/C
J4-6	RX-
J4-7	N/C
J4-8	N/C

EXTERNAL INTERFACE CONNECTORS

REF DES	DESCRIPTION	CONNECTOR TYPE	CONNECTS TO
J1	RF INPUT	N-F	N-M
J2	RF OUTPUT MONITOR	N-F	N-M
J3	AC POWER IN	MS3102E16-10P	MS3106F16-10S
J4	ETHERNET	RJFTV21N	RJFTV6N
J5	CONTROL	MS3102E18-19P	MS3102F18-19S
J6	RF OUTPUT	7/16 DIN FEM	7/16 DIN MALE

J5 - CONTROL	
CONN	DESCRIPTION
J5-A	TX INHIBIT +V
J5-B	TX INHIBIT -V
J5-C	N/U
J5-D	RS-232 Rx
J5-E	RS-232 Tx
J5-F	RS-232 RTN
J5-G	N/U
J5-H	N/U
J5-J	N/U
J5-K	N/U

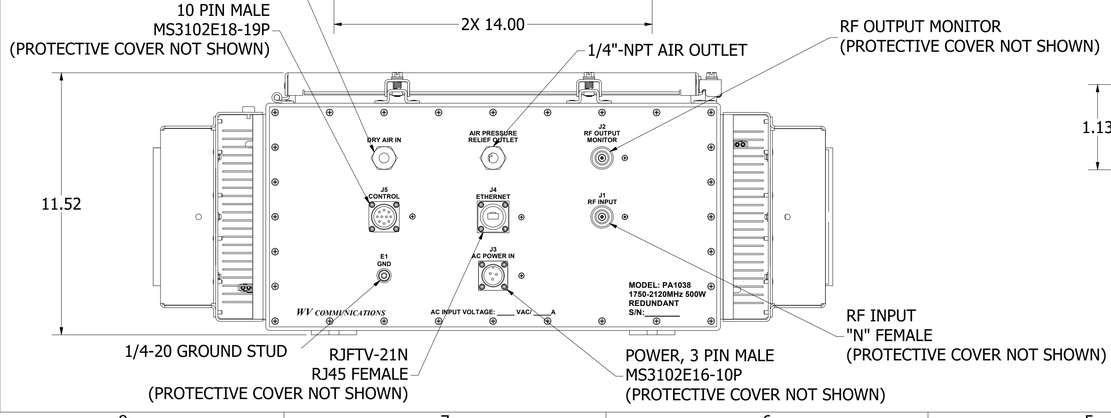

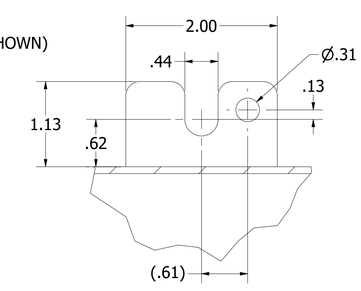

SECTION A-A
(TYP DETAIL OF MOUNTING TAB)
(*FRONT TABS ONLY)

900-50483	PA1038
NEXT ASSEMBLY	USED ON
APPLICATION	

UNLESS OTHERWISE SPECIFIED: DIMENSIONS ARE IN INCHES. TOLERANCES ARE:
FRACTIONS ± 1/64 — DECIMALS X± .1, .XX± .01, .XXX± .005 — ANGLES ± 0°30' — HOLES .XX± .005, .XXX +.003 -.001
MACHINED FINISH: 32 RMS
REMOVE BURRS .005 MAX
MATERIAL -
-
FINISH -
-
DO NOT SCALE DRAWING

APPROVALS		DATE
DRAWN	TONY T	1/24/2019
CHECKED	TT	1/24/2019
MECH ENGR	TT	1/24/2019
ELEC ENGR	TT	1/24/2019
PRODUCTION	AM	1/24/2019
Q.A.	DH	1/24/2019

WV Communications 1125 A Business Center Circle Newbury Park, CA

AMPLIFIER OUTDOOR
1750-2120MHz 500W REDUNDANT W/ RX FILTER
MODEL: PA1038

SIZE	CAGE CODE	DWG. NO.	REV
D	1GFQ7	050-51071	C
SCALE NONE	MODEL NO. PA1038	SHEET 1 OF 1	

REV C
DWG NO. 050-51071