** PROPRIETARY DATA **

THIS DOCUMENT CONTAINS DATA WHICH IS PROPRIETARY OR CONFIDENTIAL TO WV COMM (WV COMMUNICATIONS INCORPORATED). THIS DOCUMENT AND THE DATA CONTAINED HEREIN SHALL NOT BE USED, DUPLICATED, OR ALTERED WITHOUT THE EXPRESSED WRITTEN CONSENT OF WV COMM. ALL RIGHTS ARE RESERVED.

REVISIONS

ZONE	REV	DESCRIPTION	DATE	APPROVED
	A	RELEASED	7/6/2017	TT
	B	ADD CABLE DIAGRAM (pg.2)	6/12/24	DB/fb
	C	CHANGED ON/OFF SHITCH ADDED BATTERY POWER TO FRON PNL	01/22/25	TT

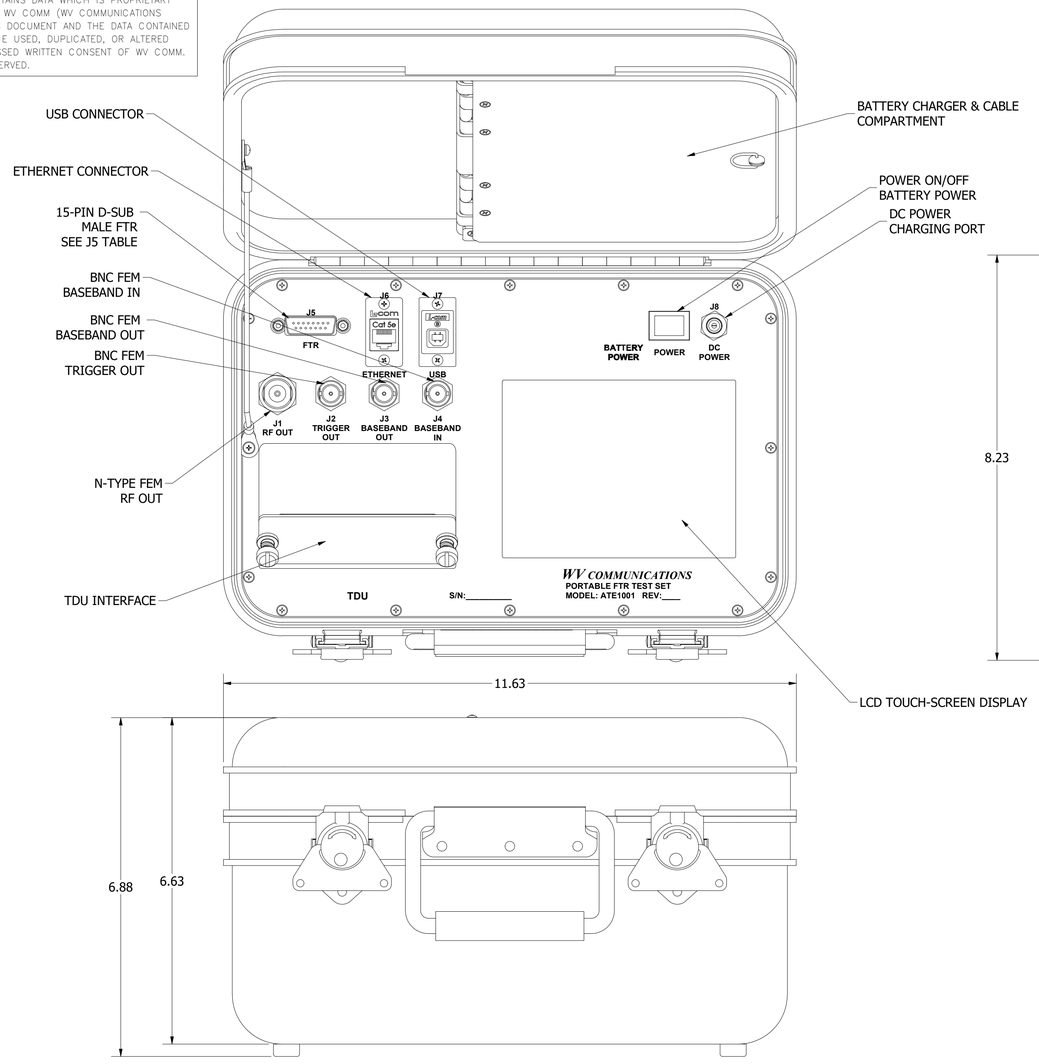

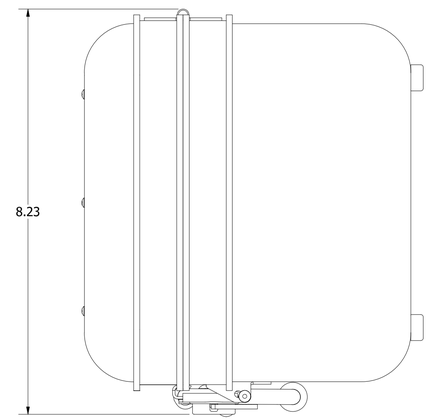

- **Generating Commands**
  - **IRIG/High Alphabet tones, commands and pilot**
  - **EFTS messages**
  - **FSK Frames / Protocols**
  - **External baseband input for special modulation**
  - **Trigger output for timing measurement**
  - **Reads and displays FTR status**
  - **Reads SSTO (Carrier) level**
  - **Reads RSTO (EFTS state) or similar analog telemetry**
  - **Reads Up to 6 discrete FTR command outputs**
  - **EFTS FTR serial status information**
  - **EFTS FTR serial User bits**

- **Configuring EFTS FTR via RS-232 port**
- **Perform RCC-313 tests 10, 13 – 23, 26, 29, 32 – 34, 35 – 40**
- **Perform test 24 using external RF Generator (tests 25 & 31 in near future)**
- **RF output from 10MHz to 1GHz for susceptibility testing**
- **RF level from -127dBm to +10dBm for sensitivity and other RF testing**
- **Carrier frequency settable in 1.0kHz steps**
- **Tone frequencies settable in 1Hz steps**
- **Timing settable in 0.1mSec increments**
- **All frequencies and timing derived from ±0.5 ppm Maximum stability time base**
- **Includes rechargeable battery power – 7 hours operation on a single charge**

- **Powerful 650MHz ARM processor can automate test sequences**
- **5.7" sunlight readable LCD with touch screen for control and status**
- **USB virtual Serial Communications and Ethernet port for remote access and control**
- **TDU slot for EFTS encryption**
- **Compact, portable & lightweight for flight line use**
- **Customizable for special situations**
- **RF and modulation uses digital SDR techniques**
- **External Modulation input supports custom signals**
- **LCD display with touch screen allows factory customization of capabilities and menus**
- **Portable Case Weight 10lbs**

900-50450	ATE1001
NEXT ASSEMBLY	USED ON
APPLICATION	

UNLESS OTHERWISE SPECIFIED: DIMENSIONS ARE IN INCHES. TOLERANCES ARE:
FRACTIONS ± 1/64 — DECIMALS X± .1, XX± .01, XXX± .005 — ANGLES ± 0°30' — HOLES XX± .005, XXX +.003 -.001
MACHINED FINISH: 32 RMS
REMOVE BURRS .005 MAX
MATERIAL -
FINISH -
DO NOT SCALE DRAWING

APPROVALS	DATE
DRAWN TONY T	7/6/2017
CHECKED TT	7/6/2017
MECH ENGR TT	7/6/2017
ELEC ENGR JT	7/6/2017
PRODUCTION AM	7/6/2017
Q.A. JC	7/6/2017

WV Communications
1125 A Business Center Circle
Newbury Park, CA

PORTABLE
FTR TEST SET
MODEL: ATE1001

SIZE	CAGE CODE	DWG. NO.	REV
D	1GFQ7	050-51020	C
SCALE NONE	MODEL NO. ATE1001	SHEET 1 OF 2	

REV C
DWG NO. 050-51020

** PROPRIETARY DATA **
THIS DOCUMENT CONTAINS DATA WHICH IS PROPRIETARY OR CONFIDENTIAL TO WV COMM (WV COMMUNICATIONS INCORPORATED). THIS DOCUMENT AND THE DATA CONTAINED HEREIN SHALL NOT BE USED, DUPLICATED, OR ALTERED WITHOUT THE EXPRESSED WRITTEN CONSENT OF WV COMM. ALL RIGHTS ARE RESERVED.

REVISIONS				
ZONE	REV	DESCRIPTION	DATE	APPROVED
		SEE SHEET 1		

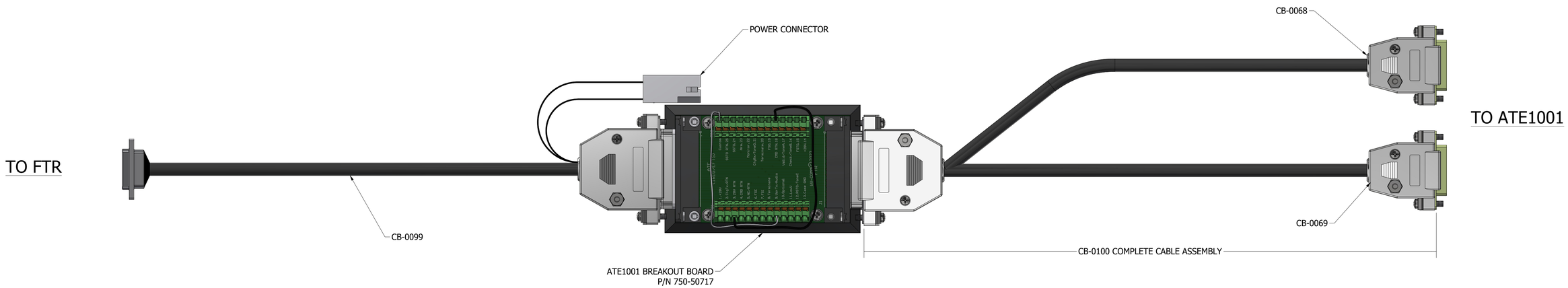

IRIG 1

CB-0068		
ATE1001	J5 FTR (D-SUB)	FTR
P1 - DB15 F-PIN	SIGNAL NAME	P2 - MDM25 M-PIN
-	EXTERNAL POWER 28V+ (RED WIRE)	1
-	N/U	2
-	EXTERNAL POWER 28V+ RETURN (BLACK WIRE)	3
-	N/U	4
-	N/U	5
-	FAILSAFE ENABLE IN	6
-	FAILSAFE CROSS LINK IN	7
10	TERMINATE OUTPUT	8
14	USER DEFINED OUTPUT	9
12	OPTIONAL OUTPUT	10
-	N/U	11
-	N/U	12
-	N/U	13
-	N/U	14
2	FAILSAFE TELEMETRY OUT	15
-	N/U	16
-	N/U	17
1	SIGNAL COMMON	18
-	N/U	19
-	N/U	20
11	TONE D TELEMETRY	21
13	MONITOR OUTPUT	22
9	ARM OUTPUT	23
3	SIGNAL STRENGTH OUTPUT	24
8	SIGNAL STRENGHT RETURN	25

EFTS 1

CB-0069		
ATE1001	J5 FTR (D-SUB)	FTR
P1 - DB15 F-PIN	SIGNAL NAME	P2 - MDM25 M-PIN
-	INPUT POWER 28V+ (RED WIRE)	1
5	CONFIGURATION Tx RS-232	2
-	DC RETURN (BLACK WIRE)	3
-	DC RETURN	4
-	N/U	5
-	FAILSAFE ENABLE IN (FSE)	6
-	FAILSAFE SYSTEM IN (FSI)	7
10	TERMINATE OUTPUT	8
7	USER DEFINED RS232 OUTPUT	9
12	OPTIONAL OUTPUT	10
-	LOW VOLTAGE SENSE	11
2	RCVR STATE TM OUT (RSTO)	12
-	CASE GND	13
-	INPUT POWER 28V+	14
14	FAILSAFE TELEMETRY OUT	15
11	CHECK CHANNEL OUT	16
-	CMD PULSE VALID	17
1	SIGNAL COMMON	18
-	FAILSAFE SYSTEM OUT (FSO)	19
-	TERMINATE OUTPUT	20
6	CONFIGURATION Rx RS-232	21
13	MONITOR OUTPUT	22
9	ARM OUTPUT	23
3	SIGNAL STRENGTH OUTPUT	24
8	DC RETURN	25

1 NOTE: THE IRIG INTERFACE CABLE ASSY. (CB-0068) AND THE EFTS INTERFACE CABLE ASSY. (CB-0069) ARE NECESSARY IN ORDER TO CONNECT THE FTR.

SIZE	CAGE CODE	DWG. NO.	REV
D	1GFQ7	050-51020	C
SCALE NONE	MODEL NO. ATE1001	SHEET 2 OF 2	

REV C
DWG. NO. 050-51020